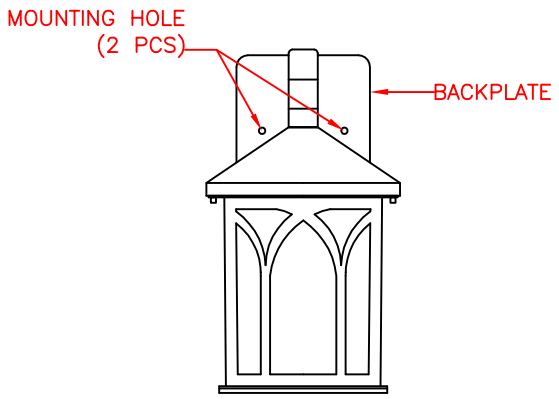

FRONT VIEW

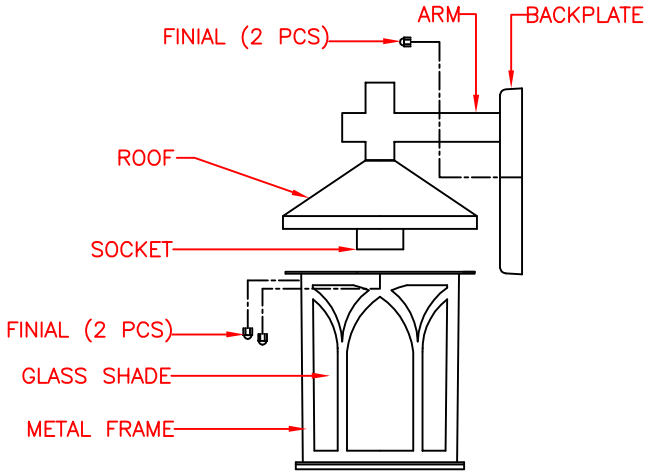

SIDE VIEW

PRODUCT SPECIFICATIONS

☐ **OVERALL ASSEMBLED DIMENSIONS**
HEIGHT: 297 MM (11-3/4"), WIDTH: 167 MM (6-5/8"), DEPTH: 211 MM (8-1/4").

☐ **1 LIGHT:** UL LISTED. 120V, 60HZ, 60 WATT. MEDIUM BASE E-26 CERAMIC SOCKET. THE SOCKET COVER SHOULD BE LONG ENOUGH TO COVER THE BULB BASE.

☐ **BACKPLATE:** POWDER COATED STEEL, 160 MM (6-1/4") LENGTH x 115 MM (4-1/2") WIDTH x 19 MM (3/4") HEIGHT. (2) HOLES IN BACKPLATE FOR MOUNTING SCREWS TO PASS THROUGH, SHAPED AS SHOWN.

☐ **ROOF:** POWDER COATED STEEL, 167 MM (6-5/8") SQ. x 59 MM (2-3/8") HEIGHT. SHAPED AS SHOWN.

☐ **GLASS SHADE:** CLEAR SEEDY GLASS SHADE, 152 MM (6") SQ. x 159 MM (6-1/4") HEIGHT.

☐ **METAL FRAME:** POWDER COATED STEEL, 163 MM (6-3/8") SQ. x 170 MM (6-3/4") HEIGHT.

☐ **ARM:** POWDER COATED STEEL, 25 MM (1") SQ. TUBING, 155 MM (6-1/8") WIDTH x 160 MM (6-1/4") HEIGHT.

☐ **SUPPLY WIRE:** UL LISTED. 18 AWG, 150°C, MUST EXTEND A MINIMUM OF 152 MM (6") PAST CENTER OF BACKPLATE, BLACK/WHITE COLOR. COPPER MATERIAL. WIRES MUST BE LEAD FREE.

☐ **LABELS:** ETL, MANUFACTURE DATE, MODEL # AND COUNTRY OF ORIGIN LABELS PROVIDED ON INSIDE OF BACKPLATE. WARNING LABEL FOR PARTS AND PARTS ARROW LABEL WERE STUCK ON INSIDE OF BOX. RELAMPING LABEL FOR 60 WATT TYPE "A" BULB PROVIDED NEAR SOCKET. RELAMPING LABELS ARE NOT ALLOWED TO BE PLACED ON THE OUTSIDE OF THE PRODUCT OR ROOF.

PACKAGING AND SHIPPING

☐ THE ITEM IS DISASSEMBLED FOR SHIPPING AS SHOWN. EACH PART IS SECURED SO THEY CAN NOT MOVE DURING SHIPPING.

☐ HARDWARE PACK #005 PROVIDED. ENTIRE FIXTURE IS COVERED IN A CLOSED PLASTIC BAG WITH A SMALL BAG OF SILICA INSIDE.

☐ THE CARTON IS MADE OF DOUBLE WALL CORRUGATED CARDBOARD "A MA A". BROWN IN COLOR. THE INNER PACKING IS DIE-CUT CARDBOARD OR STYROFOAM TO PROTECT AND SECURE THE FIXTURE AND MUST PASS THE FEDEX AND ISTA-3A DROP TEST REQUIREMENTS.

☐ EACH CARTON SHALL BE PRINTED WITH A LINE DRAWING AND THE KENROY HOME NAME AND LOGO, MODEL NUMBER AND FINISH, EACH CARTON SHALL BE PROVIDED A UPC LABEL. THE UPC BAR CODE AS FOLLOWS: 053392122218.

OTHER DETAILS:

☐ ENTIRE BACKPLATE ASSEMBLY MUST SIT FLUSH AGAINST WALL SURFACE.

☐ ALL VISIBLE METAL PARTS MUST MATCH FIXTURE FINISH UNLESS OTHERWISE SPECIFIED.

☐ MODEL 93276BL INSTRUCTIONS ARE TO BE PRINTED CLEARLY ON QUALITY PAPER AND PACKED WITH EACH FIXTURE.

☐ ALL BAGS MUST BE LABELED WITH OFFICIAL "THIS BAG IS NOT A TOY" STATEMENT.

☐ ASSEMBLY TIME: 5 MINUTES.

☐ THIS FIXTURE IS RATED FOR WET LOCATION, THE ETL NUMBER IS 4001800.

☐ DIMS OF BOX: 360 MM (14-1/8") LENGTH x 230 MM (9-1/16") WIDTH x 245 MM (9-5/8") HEIGHT. (CUFT.: 0.71')

☐ NET WEIGHT: 3.1 LBS. GROSS WEIGHT: 4.2 LBS.

☐ THIS ITEM IS RATED FOR WET LOCATION: IP03.

KENROY HOME
3723 Regent Boulevard
JACKSONVILLE, FL. 32224
PHONE: 904-642-4340
FAX: 904-642-4150

THIS DOCUMENT AND THE INFORMATION THAT IT DISCLOSES IS THE EXCLUSIVE PROPERTY OF KENROY HOME. ANY REPRODUCTION OR USE OF THIS DRAWING IN PART OR IN WHOLE, WITHOUT THE EXPRESS CONSENT OF THE PROPRIETOR IS PROHIBITED. © 2016 KENROY HOME.

DATE: 8/1/2016	SCALE: NONE	DRAWN BY: HENRY	REVISION DATE: 4/23/2020 USE NEW INS. REVISION DATE: 8/19/2020 change lantern size	MODEL #: 93276BL
			REVISION DATE:	FINISH: BLACK
REFERENCE: CANTERBURY 1 LIGHT LANTERN			APPROVAL:	PAGE: 1 OF: 1